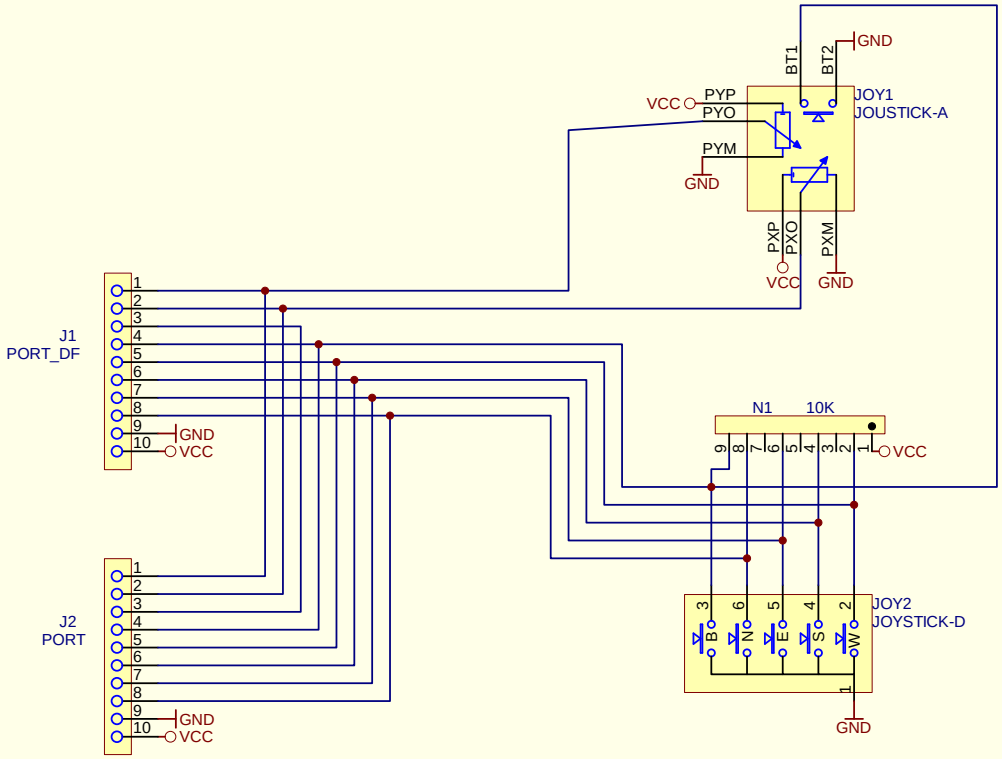

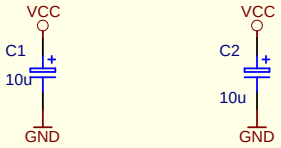

E-LAB

COMPUTERS Tel. 07268/9124-0
D74906 Bad Rappenau Fax 07268/9124-24

Analog/Digital Joystick

8-way digital or x-y-z analog Joystick

Copyright by E-LAB rev1

Datum: 24-Aug-2004
Name: R. Hofmann

Rev#	Datum	Rev.	Obj.

Blatt 1 von 1