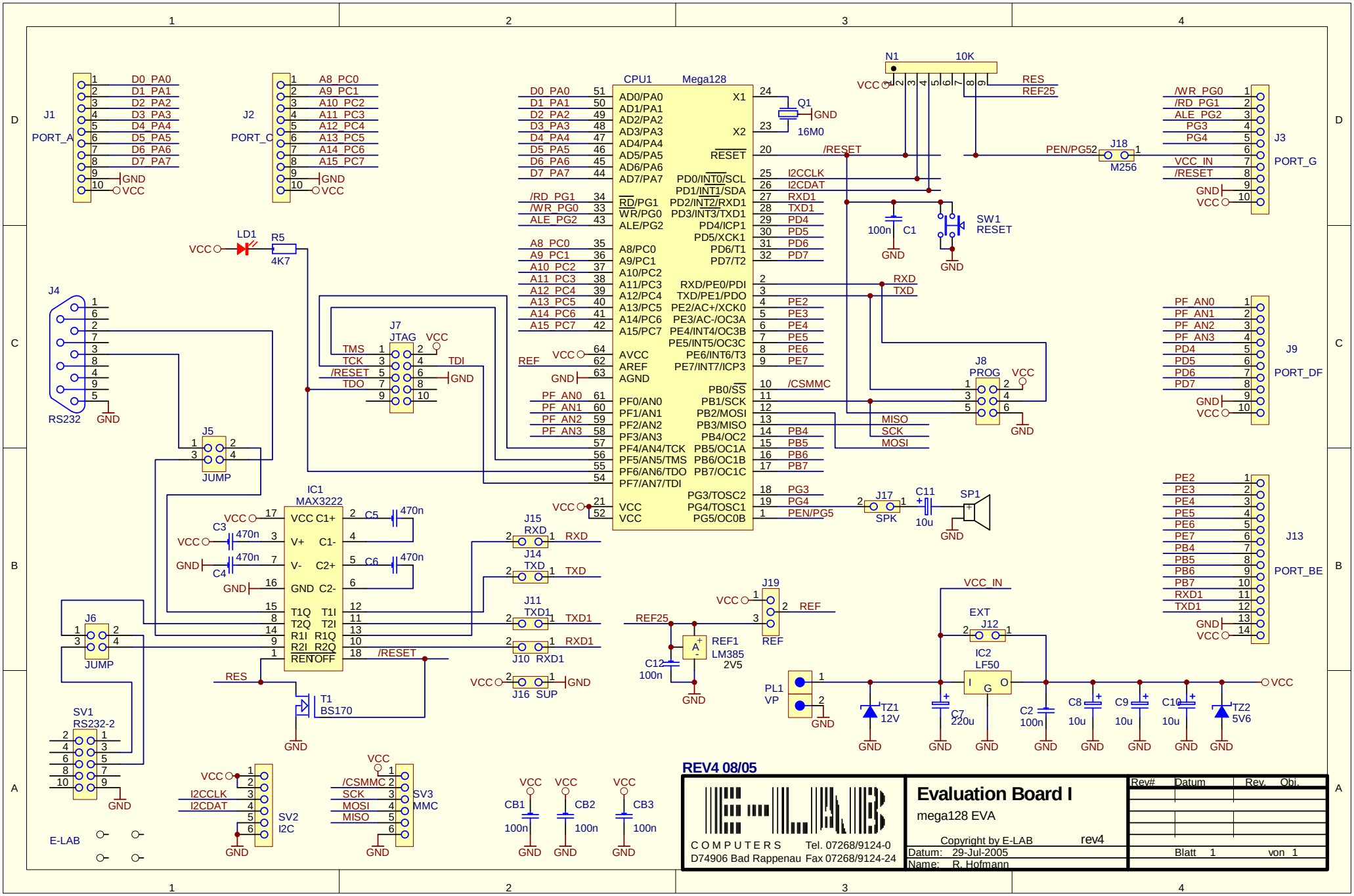
J1
PORT_A
D0_PA0
D1_PA1
D2_PA2
D3_PA3
D4_PA4
D5_PA5
D6_PA6
D7_PA7
GND
VCC
J2
PORT_C
A8_PC0
A9_PC1
A10_PC2
A11_PC3
A12_PC4
A13_PC5
A14_PC6
A15_PC7
CPU1
Mega128
AD0/PA0
AD1/PA1
AD2/PA2
AD3/PA3
AD4/PA4
AD5/PA5
AD6/PA6
AD7/PA7
RD/PG1
WR/PG0
ALE/PG2
A8/PC0
A9/PC1
A10/PC2
A11/PC3
A12/PC4
A13/PC5
A14/PC6
A15/PC7
AVCC
AREF
AGND
PF0/AN0
PF1/AN1
PF2/AN2
PF3/AN3
PF4/AN4/TCK
PF5/AN5/TMS
PF6/AN6/TDO
PF7/AN7/TDI
VCC
VCC
X1
X2
RESET
PD0/INT0/SCL
PD1/INT1/SDA
PD2/INT2/RXD1
PD3/INT3/TXD1
PD4/ICP1
PD5/XCK1
PD6/T1
PD7/T2
RXD/PE0/PDI
TXD/PE1/PDO
PE2/AC+/XCK0
PE3/AC-/OC3A
PE4/INT4/OC3B
PE5/INT5/OC3C
PE6/INT6/T3
PE7/INT7/ICP3
PB0/SS
PB1/SCK
PB2/MOSI
PB3/MISO
PB4/OC2
PB5/OC1A
PB6/OC1B
PB7/OC1C
PG3/TOSC2
PG4/TOSC1
PG5/OC0B
/CSMMC
PB4
PB5
PB6
PB7
PG3
PG4
PEN/PG5
Q1
16M0
N1
10K
RES
REF25
/RESET
I2CCLK
I2CDAT
RXD1
TXD1
PD4
PD5
PD6
PD7
RXD
TXD
PE2
PE3
PE4
PE5
PE6
PE7
MISO
SCK
MOSI
REF
PEN/PG5
J18
M256
PEN/PG52
J3
PORT_G
/WR_PG0
/RD_PG1
ALE_PG2
PG3
PG4
VCC_IN
/RESET
GND
VCC
100n
C1
SW1
RESET
LD1
R5
4K7
J4
RS232
J7
JTAG
TMS
TCK
/RESET
TDO
TDI
J8
PROG
J9
PORT_DF
PF_AN0
PF_AN1
PF_AN2
PF_AN3
PD4
PD5
PD6
PD7
J5
JUMP
IC1
MAX3222
VCC C1+
V+ C1-
V- C2+
GND C2-
T1Q T1I
T2Q T2I
R1I R1Q
R2I R2Q
RENOFF
C3
470n
C4
470n
C5
470n
C6
470n
J15
RXD
J14
TXD
J11
TXD1
J10 RXD1
J16 SUP
J17
SPK
C11
10u
SP1
J13
PORT_BE
PE2
PE3
PE4
PE5
PE6
PE7
PB4
PB5
PB6
PB7
RXD1
TXD1
J6
JUMP
RES
T1
BS170
J19
REF
REF25
REF1
LM385
2V5
C12
100n
PL1
VP
TZ1
12V
C7
220u
VCC_IN
EXT
J12
IC2
LF50
C2
100n
C8
10u
C9
10u
C10
10u
TZ2
5V6
SV1
RS232-2
SV2
I2C
SV3
MMC
/CSMMC
SCK
MOSI
MISO
CB1
100n
CB2
100n
CB3
100n
E-LAB
REV4 08/05
E-LAB
COMPUTERS
D74906 Bad Rappenau
Tel. 07268/9124-0
Fax 07268/9124-24
Evaluation Board I
mega128 EVA
Copyright by E-LAB
rev4
Datum: 29-Jul-2005
Name: R. Hofmann
Rev#
Datum
Rev.
Obj.
Blatt 1 von 1