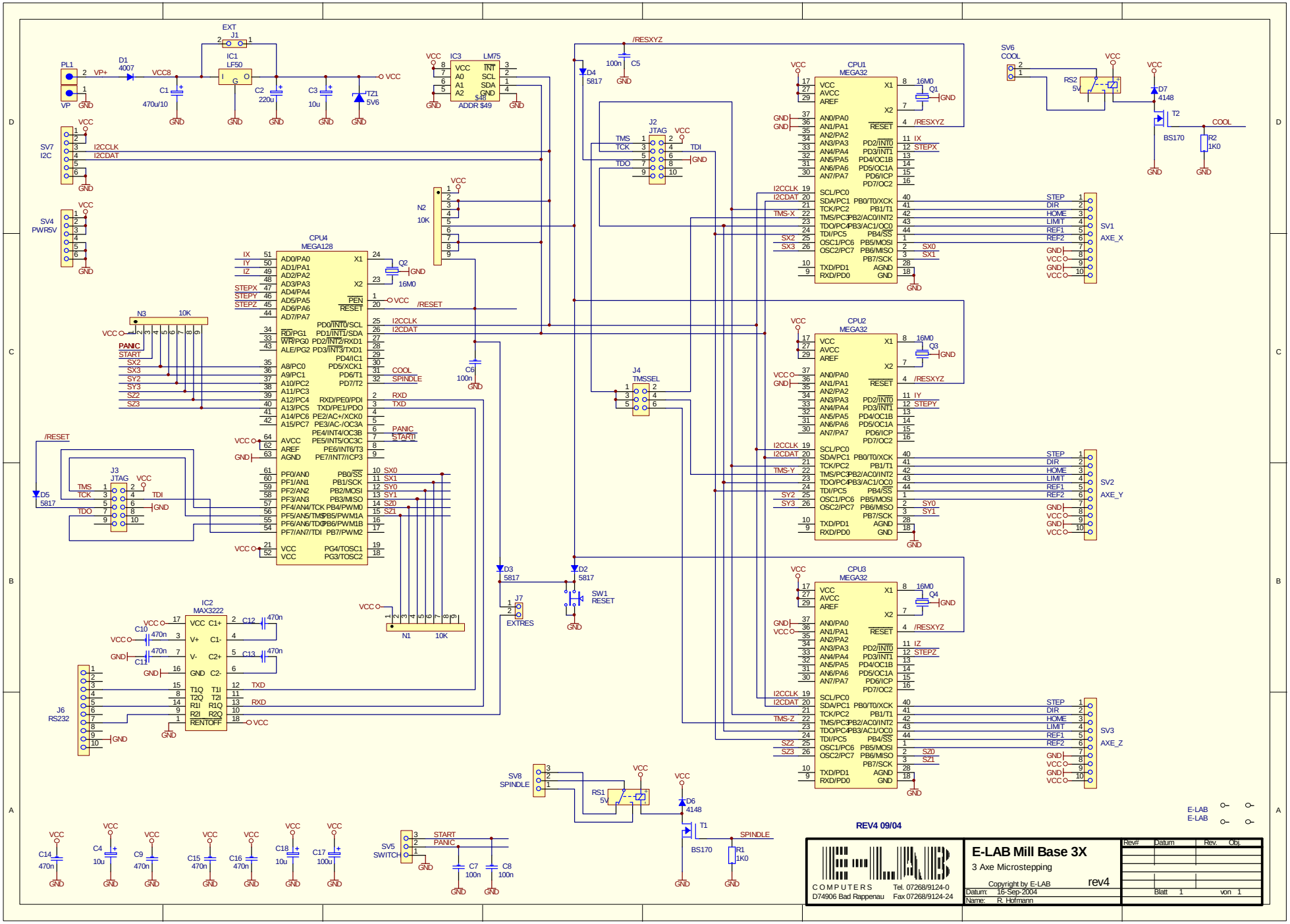
PL1
VP
GND
VP+
D1
4007
VCC8
C1
470u/10
EXT
J1
IC1
LF50
C2
220u
C3
10u
TZ1
5V6
VCC
IC3
LM75
VCC
A0
A1
A2
INT
SCL
SDA
GND
S48
ADDR $49
/RESXYZ
D4
5817
C5
100n
SV7
I2C
I2CCLK
I2CDAT
SV4
PWR5V
N2
10K
CPU4
MEGA128
IX
IY
IZ
STEPX
STEPY
STEPZ
X1
X2
16M0
Q2
PEN
RESET
/RESET
I2CCLK
I2CDAT
N3
10K
PANIC
START
SX2
SX3
SY2
SY3
SZ2
SZ3
COOL
SPINDLE
RXD
TXD
PANIC
START
C6
100n
J4
TMSSEL
J3
JTAG
TMS
TCK
TDO
TDI
D5
5817
AVCC
AREF
AGND
SX0
SX1
SY0
SY1
SZ0
SZ1
D3
5817
D2
5817
SW1
RESET
J7
EXTRES
N1
10K
IC2
MAX3222
C10
470n
C11
470n
C12
470n
C13
470n
VCC
V+
V-
C1+
C1-
C2+
C2-
GND
T1Q
T2Q
R1I
R2I
RENTOFF
T1I
T2I
R1Q
R2Q
TXD
RXD
J6
RS232
CPU1
MEGA32
Q1
16M0
/RESXYZ
IX
STEPX
I2CCLK
I2CDAT
TMS-X
SX2
SX3
SX0
SX1
STEP
DIR
HOME
LIMIT
REF1
REF2
SV1
AXE_X
CPU2
MEGA32
Q3
16M0
IY
STEPY
TMS-Y
SY2
SY3
SY0
SY1
SV2
AXE_Y
CPU3
MEGA32
Q4
16M0
IZ
STEPZ
TMS-Z
SZ2
SZ3
SZ0
SZ1
SV3
AXE_Z
SV6
COOL
RS2
5V
D7
4148
T2
BS170
R2
1K0
SV8
SPINDLE
RS1
5V
D6
4148
T1
BS170
R1
1K0
SV5
SWITCH
START
PANIC
C7
100n
C8
100n
C14
470n
C4
10u
C9
470n
C15
470n
C16
470n
C18
10u
C17
100u
E-LAB
E-LAB
REV4 09/04
E-LAB
COMPUTERS
D74906 Bad Rappenau
Tel. 07268/9124-0
Fax 07268/9124-24
E-LAB Mill Base 3X
3 Axe Microstepping
rev4
Copyright by E-LAB
Datum: 16-Sep-2004
Name: R. Hofmann
Rev# Datum Rev. Obj.
Blatt 1 von 1