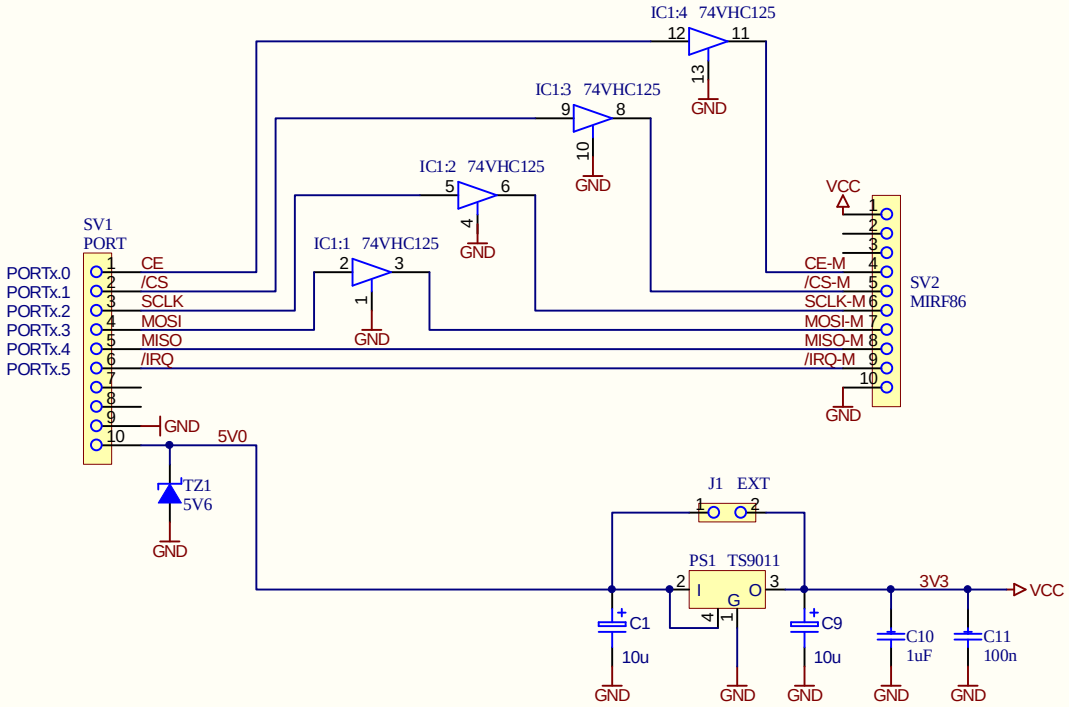

REV1 04/09

E-LAB

COMPUTERS
D74906 Bad Rappenau
Tel. 07268/9124-0
Fax 07268/9124-24

E-LAB MIRF86 Adaptor

MIRF Interface E-LAB MIRF86

Copyright by E-LAB

REV1

Datum: 13.04.2009
Name: R. Hofmann

Rev#	Datum	Rev.	Obj.

Blatt 1 von 1