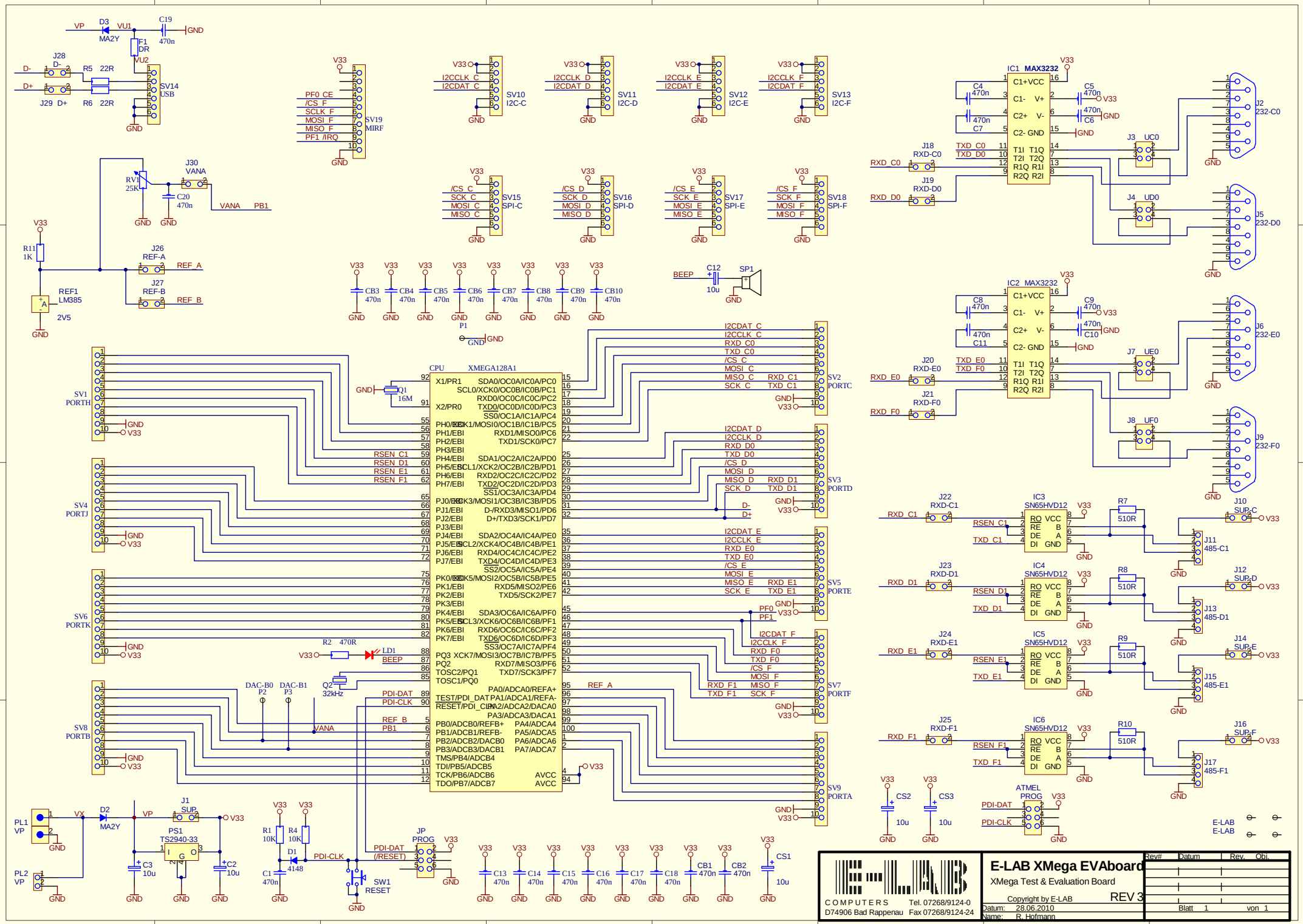
E-LAB XMega EVAboard
XMega Test & Evaluation Board
REV 3
Copyright by E-LAB
Datum: 28.06.2010
Name: R. Hofmann
COMPUTERS
D74906 Bad Rappenau
Tel. 07268/9124-0
Fax 07268/9124-24
Rev# Datum Rev. Obj.
Blatt 1 von 1
CPU XMEGA128A1
IC1 MAX3232
IC2 MAX3232
IC3 SN65HVD12
IC4 SN65HVD12
IC5 SN65HVD12
IC6 SN65HVD12
SV1 PORTH
SV2 PORTC
SV3 PORTD
SV4 PORTJ
SV5 PORTE
SV6 PORTK
SV7 PORTF
SV8 PORTB
SV9 PORTA
SV10 I2C-C
SV11 I2C-D
SV12 I2C-E
SV13 I2C-F
SV14 USB
SV15 SPI-C
SV16 SPI-D
SV17 SPI-E
SV18 SPI-F
SV19 MIRF
J2 232-C0
J5 232-D0
J6 232-E0
J9 232-F0
J11 485-C1
J13 485-D1
J15 485-E1
J17 485-F1
J1 SUP
J10 SUP-C
J12 SUP-D
J14 SUP-E
J16 SUP-F
J3 UC0
J4 UD0
J7 UE0
J8 UF0
J18 RXD-C0
J19 RXD-D0
J20 RXD-E0
J21 RXD-F0
J22 RXD-C1
J23 RXD-D1
J24 RXD-E1
J25 RXD-F1
J26 REF-A
J27 REF-B
J28 D-
J29 D+
J30 VANA
JP PROG
ATMEL PROG
PS1 TS2940-33
REF1 LM385
2V5
Q1 16M
Q2 32kHz
SW1 RESET
SP1
BEEP
LD1 BEEP
PL1 VP
PL2 VP
E-LAB
E-LAB