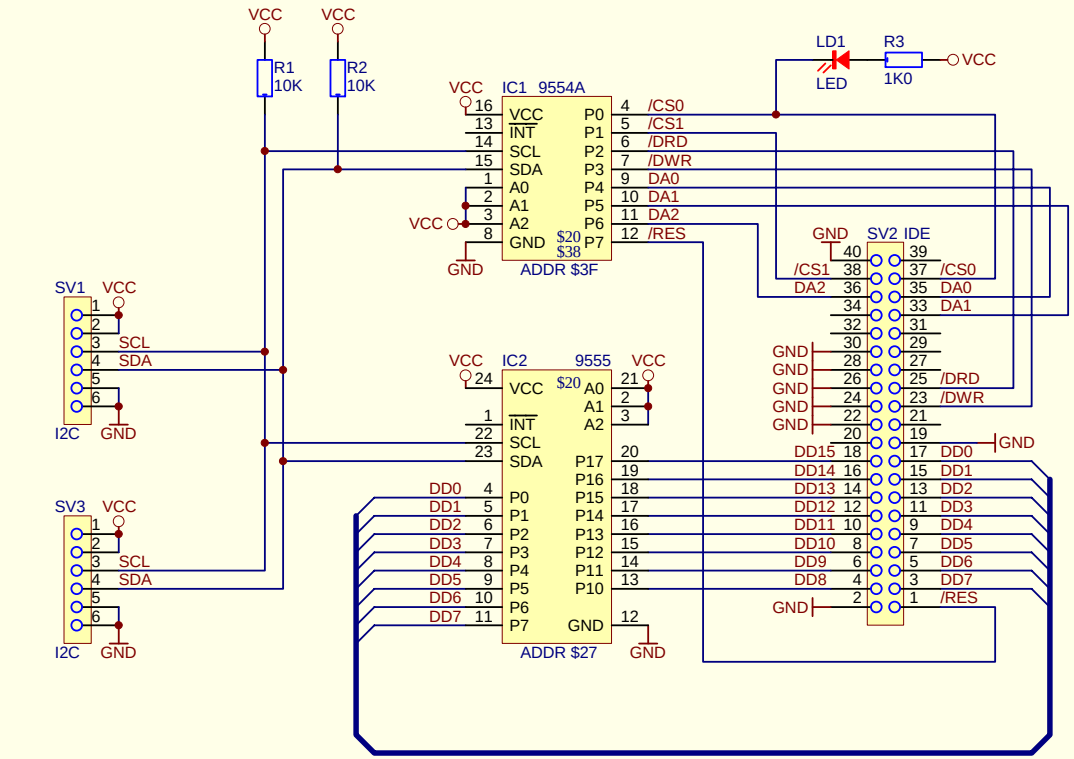

COMPUTERS
D74906 Bad Rappenau
Tel. 07268/9124-0
Fax 07268/9124-24

AVR-IDE Interface

TWI/I2C Interface

Copyright by E-LAB REV2

Datum: 9-Dec-2003
Name: R. Hofmann

Rev#	Datum	Rev.	Obj.

Blatt 1 von 1