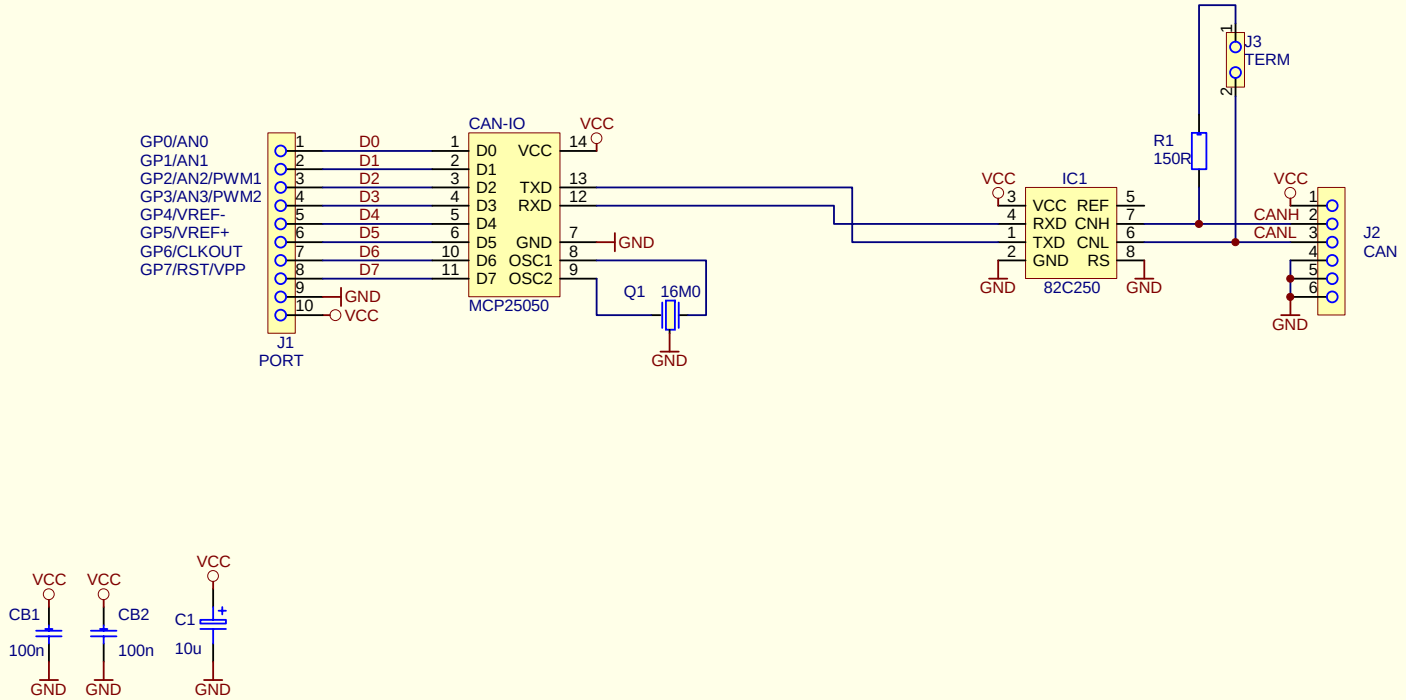

BEF1 BEF2 E-LAB

COMPUTERS
D74906 Bad Rappenau
Tel. 07268/9124-0
Fax 07268/9124-24

CAN-IO Expander

CAN Evaluation

Copyright by E-LAB

REV 1

Datum: 18-Nov-2003
Name: R. Hofmann

Rev#	Datum	Rev.	Obj.

Blatt 1 von 1