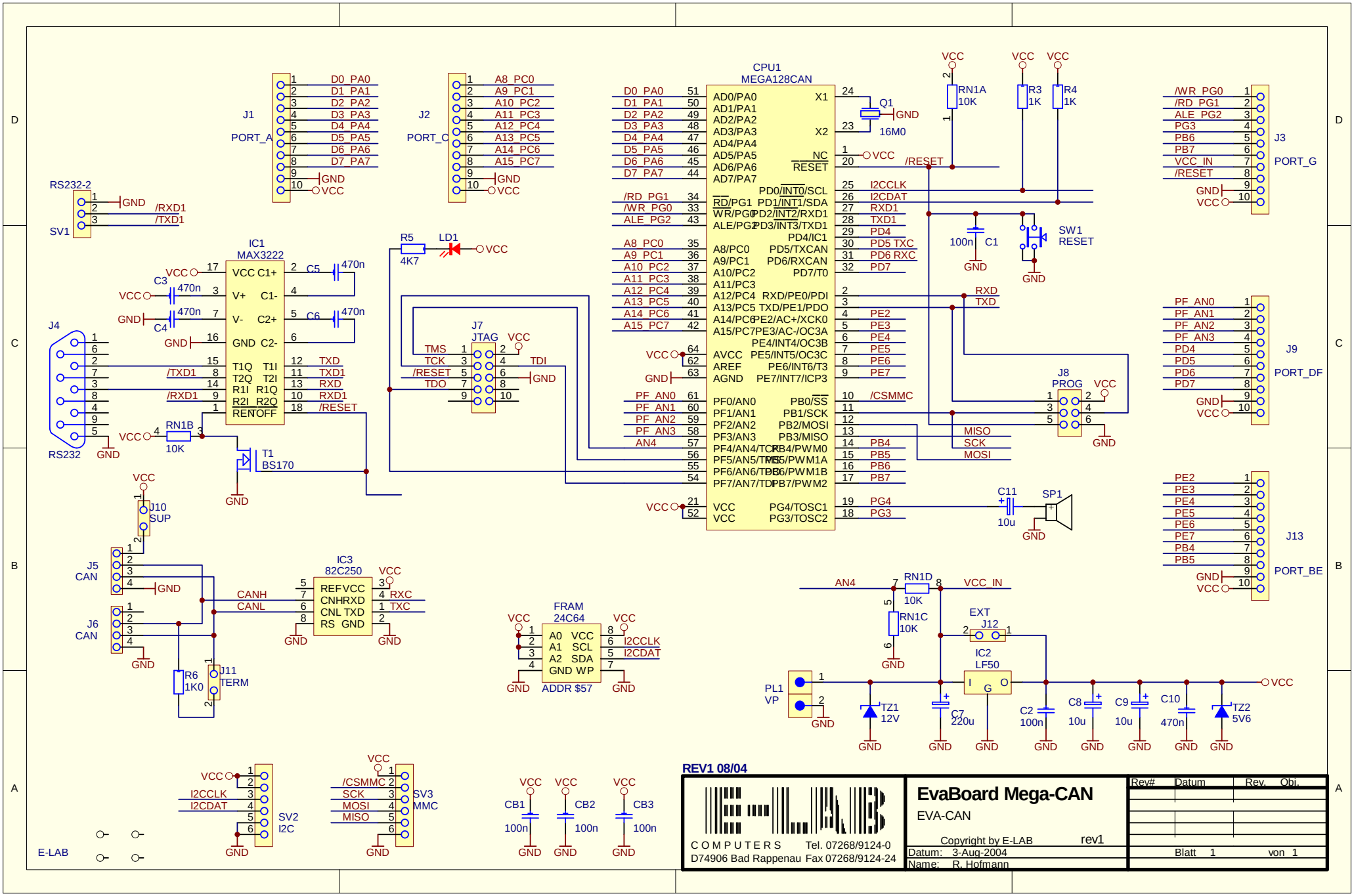
CPU1
MEGA128CAN
J1
PORT_A
J2
PORT_C
J3
PORT_G
J9
PORT_DF
J13
PORT_BE
RS232-2
SV1
IC1
MAX3222
J4
RS232
J7
JTAG
J8
PROG
J5
CAN
J6
CAN
J10
SUP
J11
TERM
IC3
82C250
FRAM
24C64
ADDR $57
IC2
LF50
EXT
J12
PL1
VP
SW1
RESET
SP1
SV2
I2C
SV3
MMC
E-LAB
REV1 08/04
E-LAB
COMPUTERS Tel. 07268/9124-0
D74906 Bad Rappenau Fax 07268/9124-24
EvaBoard Mega-CAN
EVA-CAN
Copyright by E-LAB
rev1
Datum: 3-Aug-2004
Name: R. Hofmann
Rev# Datum Rev. Obj.
Blatt 1 von 1