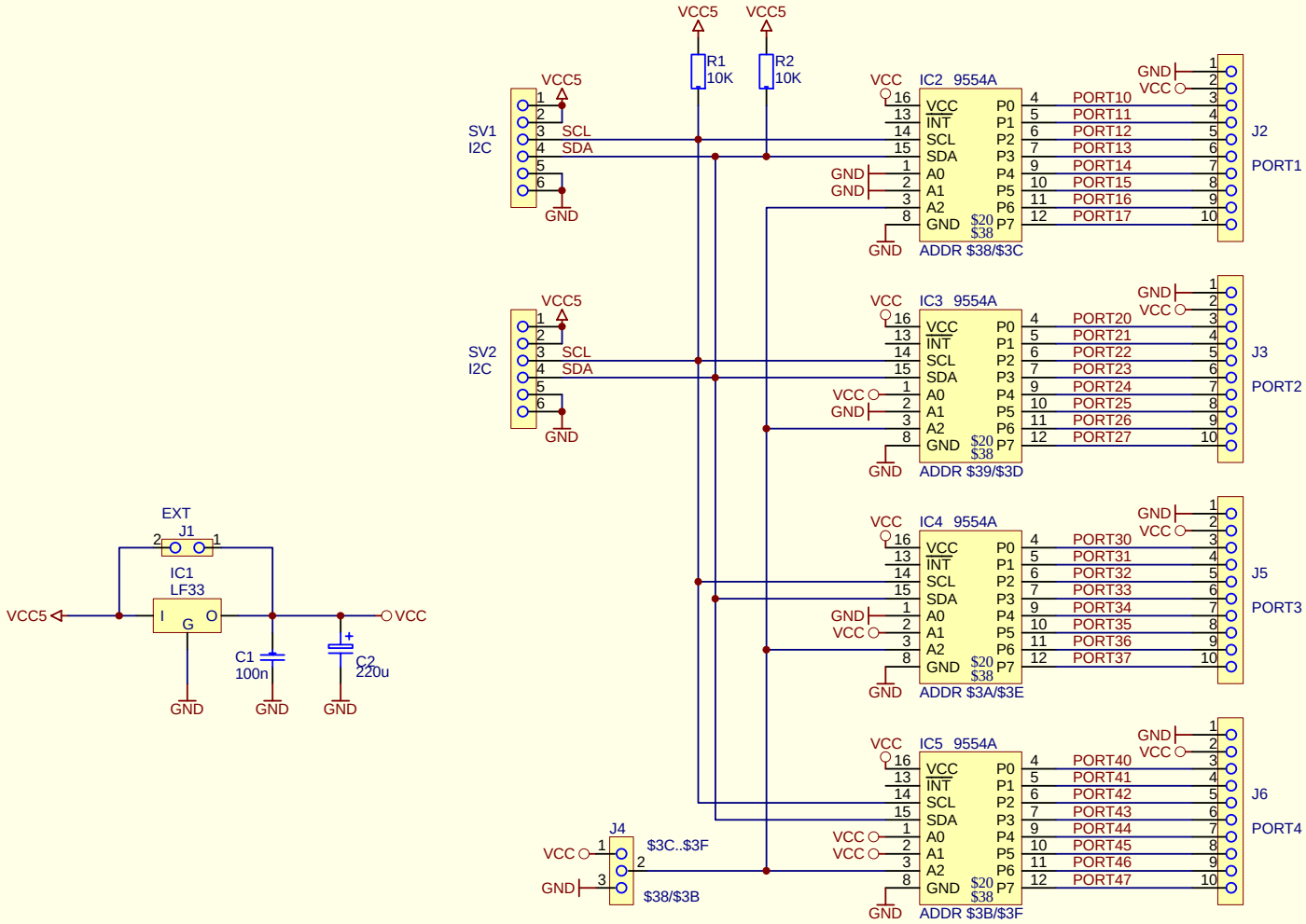

9554 Addr $20..$27

9554A Addr $38..$3F

LOGO1
E-LAB
LOGO

COMPUTERS
D74906 Bad Rappenau
Tel. 07268/9124-0
Fax 07268/9124-24

I2C Port Expander

4x 8 Bit port

Copyright by E-LAB rev1

Datum: 16-Sep-2003
Name: R. Hofmann

Rev#	Datum	Rev.	Obj.

Blatt 1 von 1