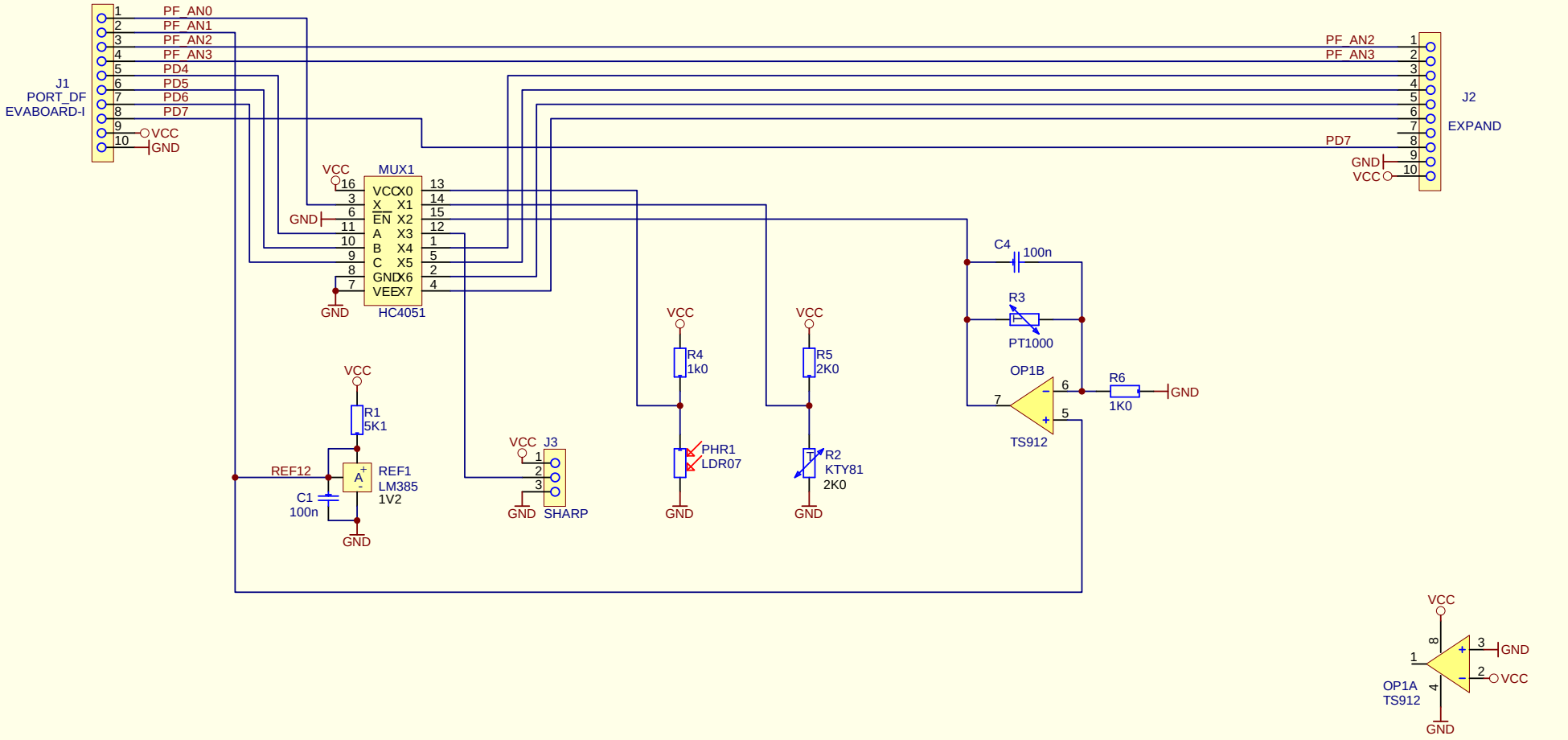

E-LAB COMPUTERS
D74906 Bad Rappenau
Tel. 07268/9124-0
Fax 07268/9124-24

E-LAB NonLinear Analog

Non-Linear Sensors

Copyright by E-LAB

Rev1

Datum: 14-Mar-2004
Name: R. Hofmann

Rev#	Datum	Rev.	Obj.

Blatt 1 von 1